PARTS LIST ＆ EXPLODED DRAWING （QP-301TH） ［Updated on May. 20 2010］ MQS-Y-233-R00

NO.	PARTS NO.	PARTS NAME	Q'TY	MATERIAL
	GX240	ENGINE		
2	1317-100010	CASING	1	ADC
3	1317-100020	CASING COVER	1	ADC
4	1317-100160	SUCTION COVER	1	ADC
5	1247-100170	DRAIN COVER	1	ADC
6	1247-100250	DRAIN COVER HANDLE	2	ADC
7	1317-000030	IMPELLER	1	FC
8	1317-000130	VOLUTE CASING	1	FC
9	1247-000200-0014	DRAIN COVER PUSH PLATE	2	FC
10	1247-000190-0014	DRAIN COVER SET HANDLE	2	FC
11	1247-200270	HINGE BOLT	2	SS400
12	1247-220280	HINGE PIN	2	S45C
13	064140-0430	SPLIT PIN	2	SWRM
14	079000-3030-0011	NIPPLE	2	FC
15	1357-214010-0004	BASE	1	SS400
16	1357-214020-0004	ENGINE BASE	1	SS400
17	072330-2040	CUSHION RUBBER	4	NBR＋SS400
18	1317-350350	CHECK VALVE	1	NBR＋SS400
19	1317-330370	SUCTION COVER PACKING	1	NBR
21	048935-2400	O-RING	1	NBR
22	048935-3970	O-RING	1	NBR
23	048931-2300	O-RING	1	NBR
24	048131-0800	O-RING	2	NBR
25	048131-0250	O-RING	1	NBR
26	048035-0300	O-RING(FLOODING DRAIN CAP)	3	NBR
27	063121-1100	FLOODING CAP	1	ABS
28	063121-1100	DRAIN CAP	2	ABS
29	080112-3530	MECHANICAL SEAL	1	CERAMIC×CUB
30	081125-3056	MECHANICAL SEAL SLEEVE	1	SUS
31	085283-3020	ADJUST LINER	1	BSP
31-1	085285-3020	ADJUST LINER	1	BSP
32	014109-0510	SCREW	2	SUS
33	014109-0820	SCREW	2	SUS
34	014105-0825	SCREW	4	SS400
35	013115-1235	CAP SCREW	5	SCM
36	013115-1030	CAP SCREW	4	SCM
37	010505-1035	BOLT	2	SS400
38	010505-1045	BOLT	4	SS400

NO.	PARTS NO.	PARTS NAME	Q'TY	MATERIAL
39	018105-0825	BOLT SET WITH SPRING WASHER	4	SS400
40	040145-0100	WASHER	4	SS400
41	040145-0080	WASHER	4	SS400
42	040145-0050	WASHER	2	SS400
43	045125-0100	SPRING WASHER	14	SWRH
44	045125-0080	SPRING WASHER	6	SWRH
45	020545-0100	NUT	14	SS400
46	074230-2080	STRAINER	1	PE
47	074111-1080	HOSE COUPLING	2	ADC
48	074124-1080	HOSE JOINT	2	ADC
49	074132-0801	HOSE COUPLING PACKING	2	NBR
50	093225-3000	WIRE HOSE BAND	1	SWRM
51	093225-0090	WIRE HOSE BAND	2	SWRM
52	1317-390610	CASING COVER PACKING	1	THREE SHEET

301T-AD EH12

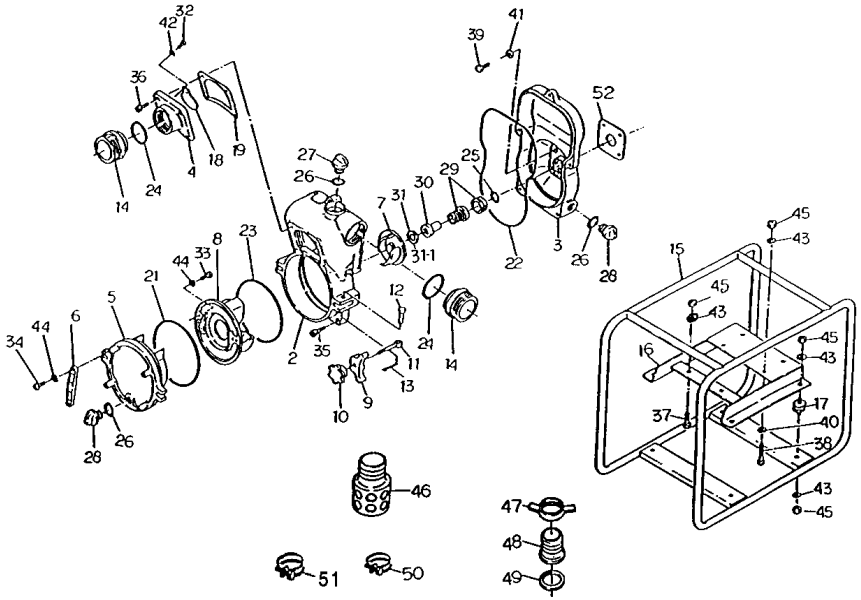

■Matsusaka Engineering-Standard Product Code : 301T-AD

□For submission to : 〔 〕 Spec Code :

MATSUSAKA ENGINEERING CO., LTD.